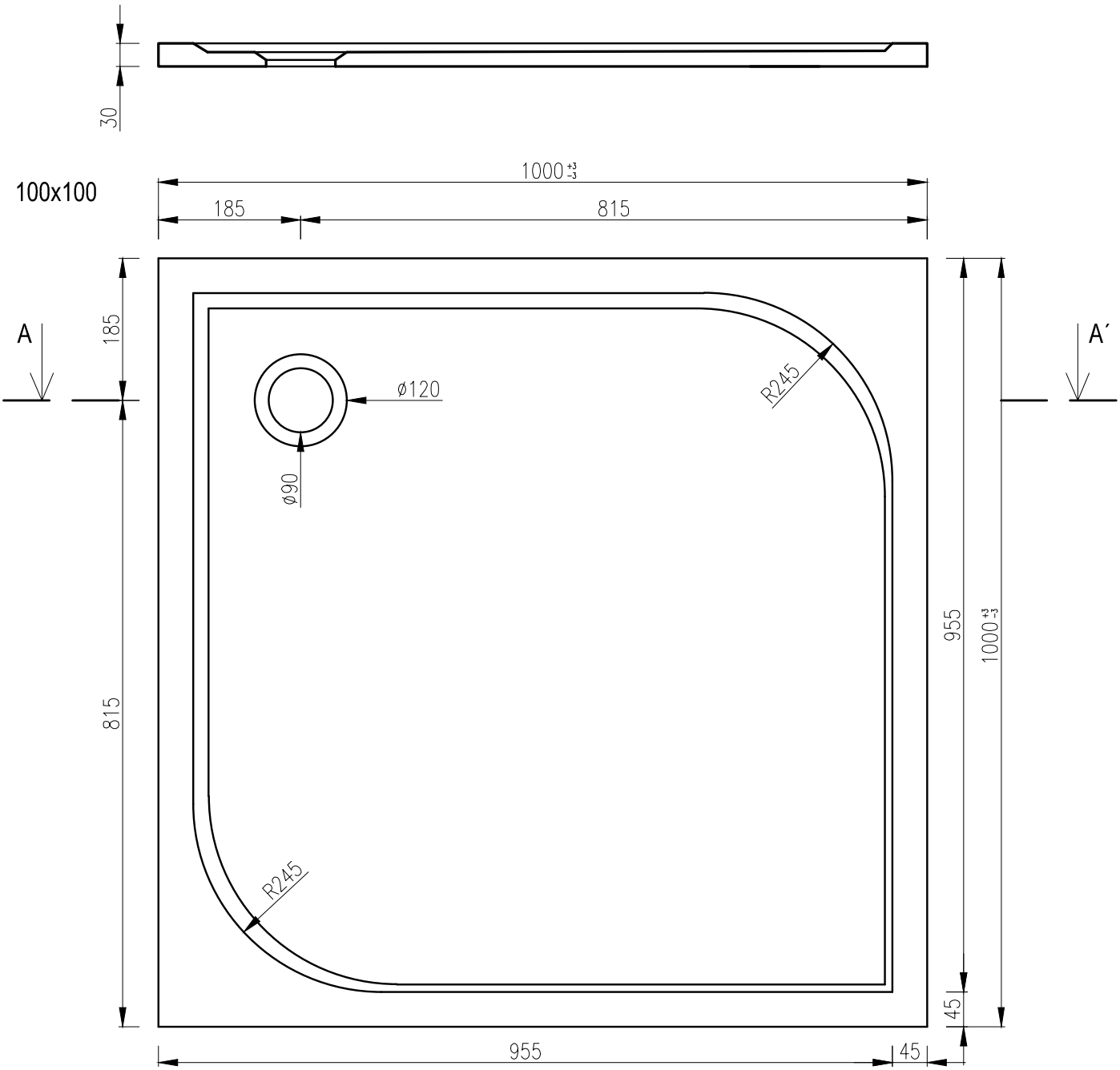
30
100x100
1000 +3 -3
185
815
A
A´
185
ø120
ø90
R245
R245
815
955
1000 +3 -3
45
955
45